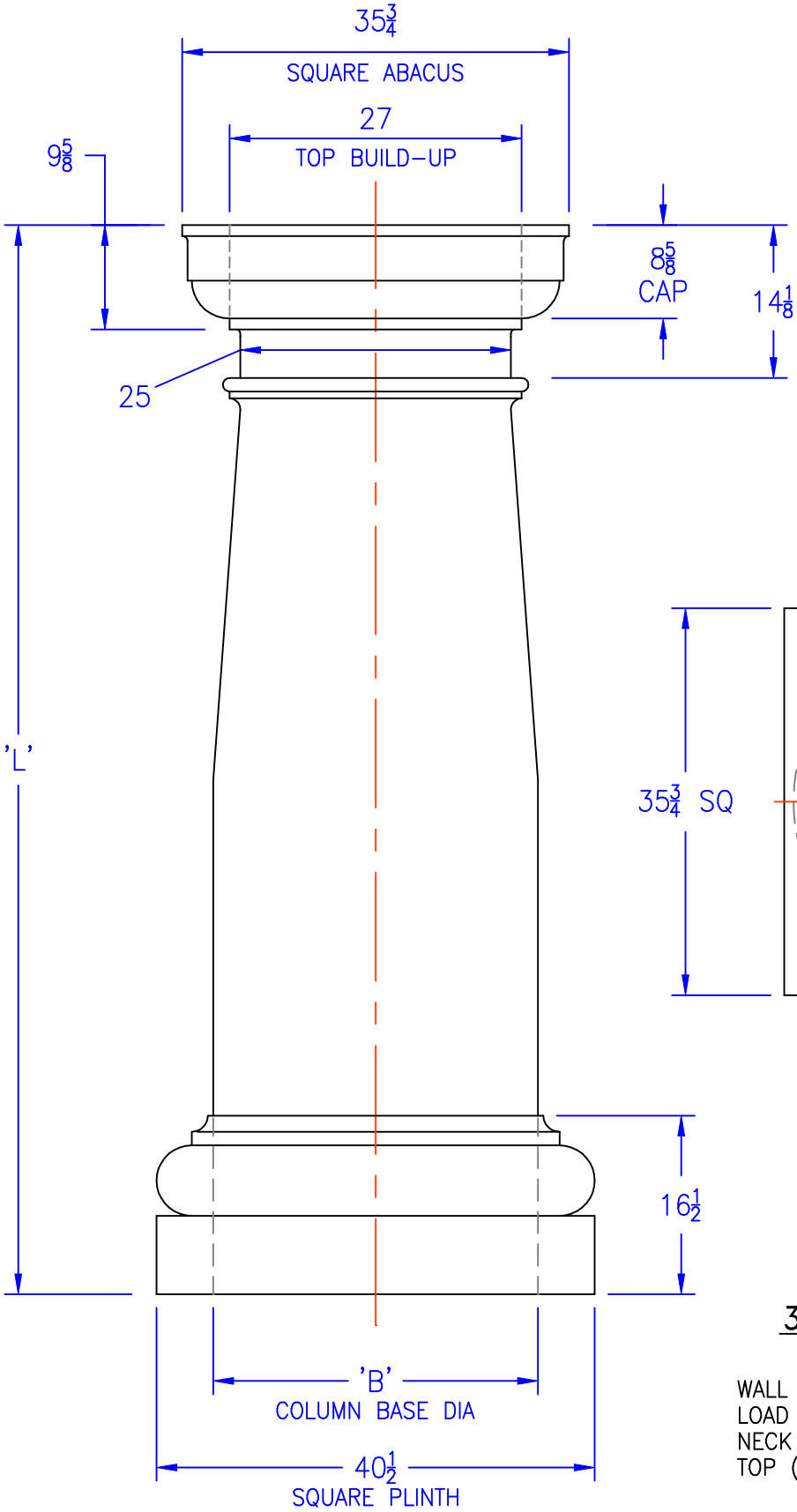

'L' OVERALL LENGTH	'B' BASE DIAMETER	WEIGHT IN LBS.
20'-0"	29 13/16"	287
22'-0"	29 13/16"	288
24'-0"	29 15/16"	299
25'-0"	30"	345

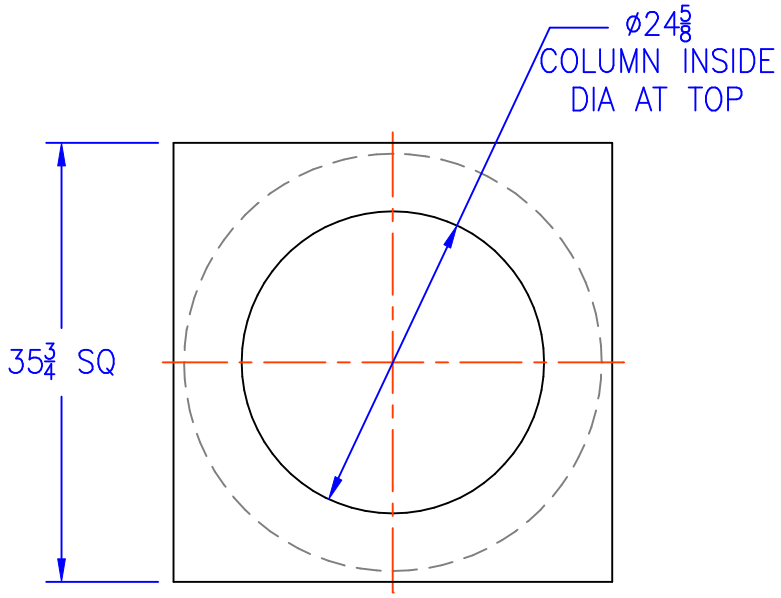

PLAN VIEW

30" COLUMN SPECIFICATIONS:

WALL THICKNESS:	.187
LOAD BEARING CAPACITY:	35,000 LBS (AXIALLY)
NECK DIAMETER:	25 INCHES
TOP (BUILD-UP) DIA:	27 INCHES

30" DIAMETER COLUMN – TUSCAN

REV	DATE	DESCRIPTION	REVISIONS

UNLESS OTHERWISE SPECIFIED DIMENSIONS ARE IN INCHES
TOLERANCES
DECIMAL .X ±.1 .XX ±.06 .XXX ±.030
ANGULAR ±.5°
FRACTION ±1/8
FINISH
DO NOT SCALE DRAWING

CONTRACT NUMBER

ORIGINATOR: T. HARTLEY — DATE: 11/11/04
CHECKER
PROJECT ENGINEER
MANUFACTURING ENGINEER
PROGRAM MANAGEMENT

TREATMENT: N/A
FINISH: N/A
SIMILAR TO: N/A — ACT WT: N/A — CALC WT: N/A

Arch Net Building Products, Inc.
Tel: 888.483.2724
Fax: 402.483.0535
website: www.archcolumns.com

TITLE: FIBERGLASS COLUMN DETAIL 30" DIAMETER TUSCAN CAP & BASE

SIZE: A — DRAWING NUMBER — REV
SCALE: NONE — RELEASE DATE — SHEET 1 OF